Bundesstelle für
Flugunfalluntersuchung

German Federal Bureau of
Aircraft Accident Investigation

Interim Report

Identification

Type of Occurrence:	Accident
Date:	4 September 2022
Location:	Baltic Sea, about 20 NM north-west of Ventspils, Latvia
Aircraft:	Airplane
Manufacturer:	Textron Aviation
Type:	Cessna 551, Citation II
Injuries to persons:	Pilot and three passengers fatally injured
Damage:	Aircraft destroyed
Other Damage:	None
State File Number:	BFU22-0915-DX

Abstract

During a private flight in accordance with instrument flight rules from Jerez, Spain, to Cologne-Bonn Airport, cabin pressure loss occurred in cruise flight which resulted in the incapacity of all persons on board. The airplane continued to fly north-east up to the coast of Latvia and subsequently crashed into the Baltic Sea.

The Austrian safety investigation authority as representative of the State of Registry and the BFU as representative of the State of the Operator agreed that the BFU will conduct the investigation. According to ICAO Annex 13, the safety investigation authorities of Latvia, Austria, USA, Canada, France and Spain are participating in the investigation.

Factual Information

History of the Flight

At 1257 UTC (1457 hrs[1]), the airplane took off from runway 20 of Jerez Airport, Spain, to a private flight to Cologne-Bonn Airport. On board were the pilot and three passengers. After take-off, the airplane turned right into a north-eastern direction and at 1330 UTC reached the planned cruising altitude FL 360.

At 1330:26 UTC, the pilot reported on the frequency of the Spanish Area Control Centre (ACC) Madrid: “Madrid, buenas tardes [callsign] three six zero”. The controller answered: “[callsign] muy buenas, identified, fly direct sierra india echo.“ The pilot answered: “Direct [unintelligible] gracias.”

At 1342:05 UTC, the pilot radioed the controller: “Madrid radar for [callsign]?“ The controller answered at 1342:13 UTC: “[callsign] go” and at 1342:14 UTC the pilot said: “There is a problem with the air condition, request direct descending.” At 1342:21 UTC, the controller answered with: “Direct where please?” Six seconds later, at 1342:27 UTC, the pilot said: “Problems with air condition eh pressurization, we request rapido descending.” Clear background noise can be heard during this radio communication of the pilot. At 1342:46 UTC, the controller answered with: “Confirm [callsign] requesting descent?” He did not receive any answer from the pilot.

At 1347:30 UTC, the controller requested the pilot to change the frequency to the neighbouring ATC sector. This radio contact was not answered either. The controller tried several times to reach the airplane either on the active or the emergency frequency.

At 1406:55 UTC, ACC Madrid informed the neighbouring sector Bordeaux ACC by telephone about the loss of radio contact with the airplane. The supervisor of Bordeaux ACC alerted the operations centre of the French Air Force.

At 1416:23 UTC, the airplane entered French airspace via waypoint ABRIX. At 1422 UTC, one of the alerted fighter planes reached the Cessna 551 which continued flying north-east at a constant altitude. The fighter’s pilot stated that he had observed the airplane first from a distance and then up close. His attempts to establish radio contact on different frequencies of air traffic control and the emergency frequency as well as by visual signs were not met with a reaction. The two pilots of the French fighter

1 All times local, unless otherwise stated.

planes stated that they could not see any outer damage on the airplane and there were no activities on board. Photos of the airplane taken at this time were made available to the BFU for the investigation. They show an undamaged airplane and an incapacitated pilot in the left-hand seat and his oxygen mask hanging unused at its place.

At the border between Luxembourg and Germany, the airplane turned north and at 1543 UTC, north-east and continued in German airspace toward the arrival aerodrome Cologne-Bonn Airport. South of Euskirchen, at waypoint ERUKI, the airplane turned and continued north-east. Two fighter airplanes of the German Air Force had taken off at 1528 UTC and took over escorting the airplane from the French fighters. The German Air Force pilots continued to observe the airplane and tried to establish radio contact with the Cessna 551 pilot. A second pair of fighter airplanes eventually took over from the first. Photos one of the German fighter airplane pilots took were also made available to the BFU. At 1650 UTC, the airplane left German airspace about 30 NM north-east of Rügen.

Subsequently, fighter airplanes from Denmark, Sweden and NATO, in form of fighters from an air base in Estonia, escorted the airplane.

At 1730 UTC, the airplane entered descent. At about 1732 UTC, it entered the airspace controlled by Latvian air traffic control.

At 1736 UTC, while descending through FL 275, the airplane turned right towards east. At 1740 UTC, passing FL 200, the airplane turned left, entered a spiral and at 1745 UTC (2045 local time), crashed into the Baltic Sea.

Fig. 1: Overview over the entire flight from take-off to impact

Source: Google Earth™, adaptation BFU

The two NATO pilots observed the airplane until the crash, documented the accident site, reported it via radio and remained at the accident site until first responders arrived.

Personnel Information

Pilot in Command

The 72-year-old Pilot in Command (PIC) held a Commercial Pilot License (CPL(A)) last issued by the Luftfahrt-Bundesamt (LBA) on 28 November 2013. The licence carried the entries type rating PIC C501/551 SP ops and the Instrument Rating (IR) valid until 23 May 2023. He had acquired this type rating in 2014.

He held a class 2 medical certificate last issued on 10 December 2021, valid until 14 January 2023 with the limitation VDL (Correction for defective distant, intermediate and near vision).

The pilot log book was not available to the BFU. The pilot's record at the LBA showed that he had a flying experience of about 800 hours on airplanes up to 2 t MTOM, about 283 hours on Piper PA31/42 and about 534 hours on Learjet 35A, 36A and 55. According to the operator, he had a flying experience of about 100 hours on type. Therefore, at the time of the accident, he had a total flying experience of about 1,700 hours.

The Aircraft Flight Log recording showed that the pilot had flown the accident airplane for about 68 hours. In 2022, he had conducted four flights of 09:22 hours until the day of the accident. Within the last 90 days prior to the accident, he had conducted one flight of about 03:18 hours. The operator stated that during the flight on 27 August 2022, which is documented by ADS-B data, the pilot had flown the airplane from Cologne-Bonn to Jerez.

Passenger Information

One of the passengers used to have a CPL(A) with the type ratings Learjet 24, 25, 31, 35, 36, 55, 55c, 60. This licence expired in October 2011.

Aircraft Information

The Cessna 551 is a twin-jet low-wing aircraft in all metal construction with a cruciform tail and a retractable landing gear in nose wheel configuration. In 1978, the Federal Aviation Administration (FAA) approved the aircraft type in accordance with the certification specifications FAR23. According to the Airplane Flight Manual (AFM), Section II Operating Limitations, minimum crew consisted of two pilots or one pilot and the following functioning equipment:

- *1 Autopilot with Approach Coupling;*
- *1 Flight Director;*
- *1 Boom Microphone or Headset Mounted Microphone;*
- *Transponder Ident Switch on Pilot's Control Wheel*

The airplane had an Austrian certificate of registration and was operated by a German operator in accordance with Non Commercial Complex (NCC).

Manufacturer:	Textron Aviation
Type:	Cessna 551
Manufacturer's Serial Number:	551-0021
Empty weight:	3,705 kg (8,168 lbs)
MTOM:	5,670 kg (12,500 lbs)
Year of Manufacture:	1979
Total operating time:	about 8,000 hours

Engines: 2 Pratt & Whitney of Canada, JT 15D-4

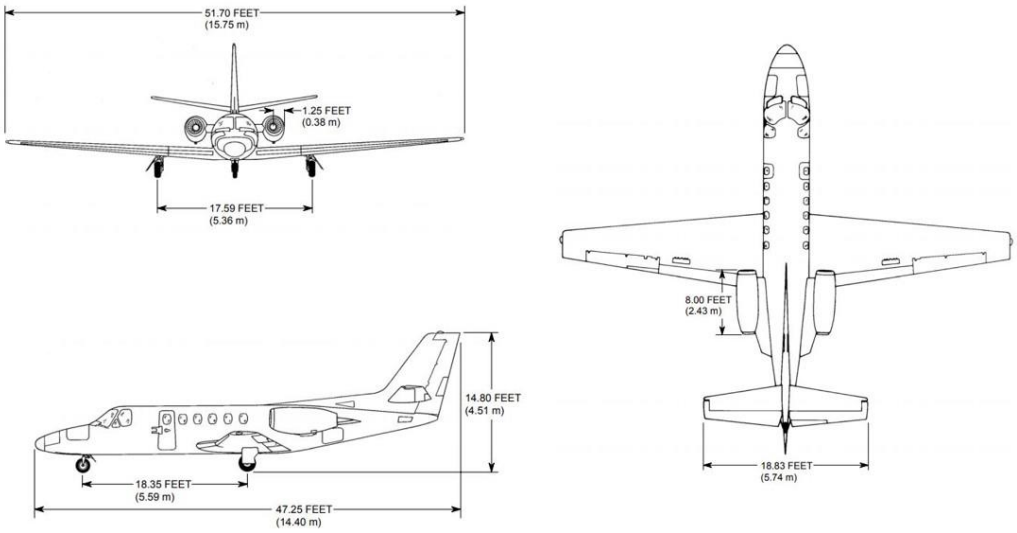

Fig. 2: Three-way view of Textron Cessna 551 Source: Manufacturer

According to the Airworthiness Review Certificate (ARC), airworthiness was last certified on 22 September 2021 at a total operating time of 7,936 hours. The ARC was valid until 9 October 2022.

The flight planning data made available to the BFU showed, that at Jerez Airport the airplane was refuelled with 4,100 lbs (block fuel). In purely mathematical terms, between the take-off in Jerez and the fuel reserve for a planned landing at the alternate aerodrome Dusseldorf the possible maximum flight time was 4:07 hours.

Equipment

According to the check report electronic equipment of 28 June 2022, the airplane was equipped with a Sperry SP-200 autopilot, a Flight Director Sperry FZ 500 and for the navigation with a Garmin GNS530 AW and a GNS530 AW TAWS, among other things.

Cabin Pressure Control System

The cabin pressure control system essentially consists of a cabin pressure controller, two outflow valves, two cabin altitude limit valves, a pneumatic relay, a manual/emergency dump valve and a vacuum regulator (Fig. 3).

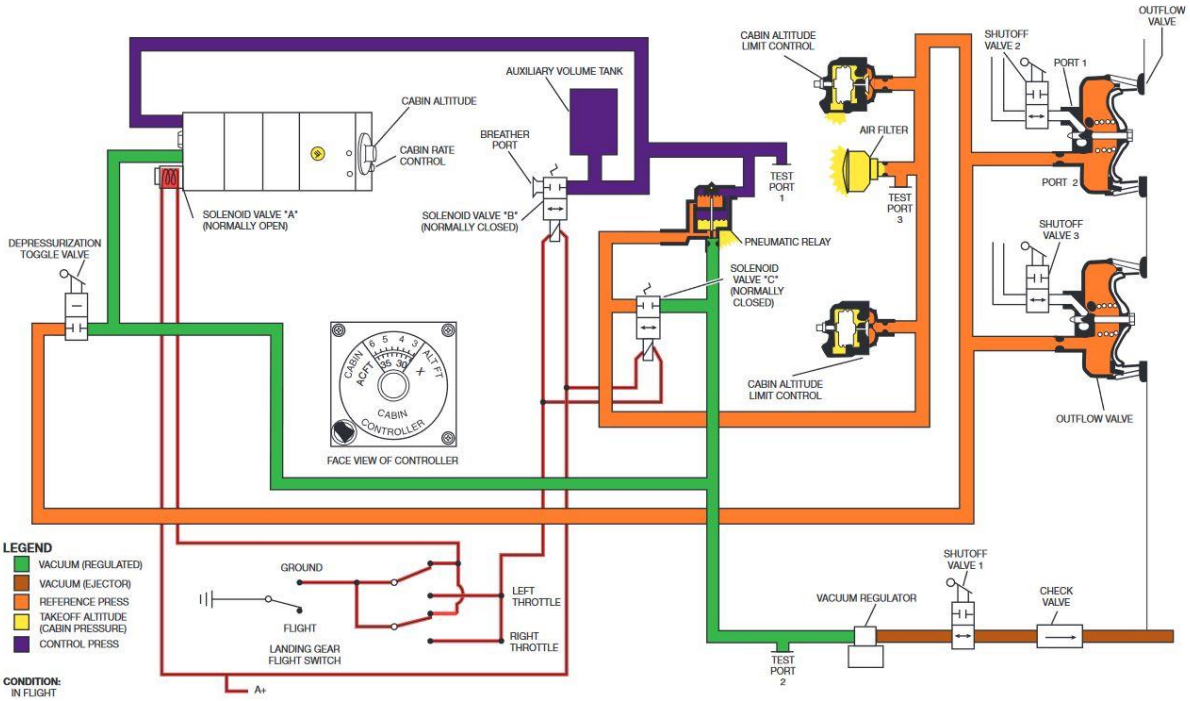

Fig. 3: Cabin pressure control system during the flight Source: FlightSafety International

Cabin pressure is controlled by electro mechanically controlled air pressurization in the cabin. Conditioned engine bleed air is channelled into the cabin and dissipates under limitation of the outflow into the atmosphere through the two outflow valves at the aft pressure bulkhead.

It is the aim of the controlled airflow to keep the cabin pressure during the entire flight in a range which allows the passengers normal breathing and oxygen supply without any additional aid. In stipulated limits, cabin pressure can either automatically or manually be adjusted via a control panel in the cockpit (Fig. 4).

Fig. 4: Cabin pressure control panel and air supply Source: FlightSafety International

A difference between cabin and ambient pressure from maximum 8.7 PSI allows a cabin altitude of not more than 8,000 ft up until the maximum permitted altitude of the airplane of 43,000 ft. If the cabin altitude exceeds about 10,000 ft, the CABIN ALT 10 000 FT Light and the MASTER WARNING Lights are triggered via a barometric switch (Fig. 5).

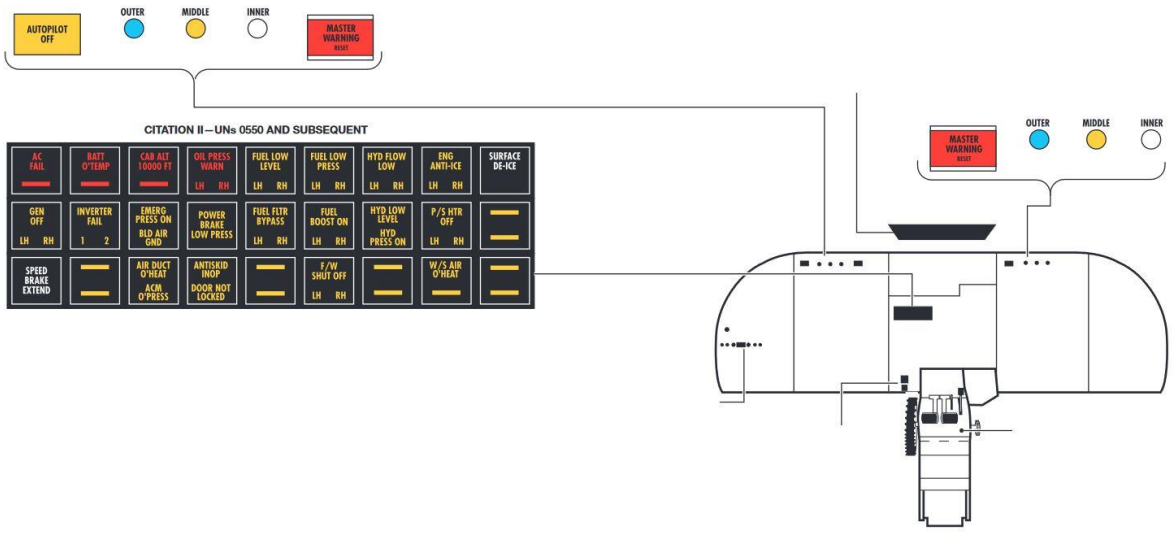

Fig. 5: Warning lights in the cockpit (Excerpt) Source: FlightSafety International

Emergency Procedures

In case of rapid decompression, the aircraft manufacturer had stipulated the following emergency procedures in the AFM, Section III (Fig. 6)[2]:

RAPID DECOMPRESSION (INDICATED BY CAB ALT 10,000 FEET LIGHT ON)

1. Oxygen Masks - DON and 100% OXYGEN.
2. Emergency Descent - AS REQUIRED.
3. Passenger Oxygen - ENSURE passengers are receiving oxygen.
4. Oxygen Microphone Switches - MIC OXY MASK.
5. Transponder - EMERGENCY.
6. Refer to Use of Supplemental Oxygen Procedures in the Abnormal Procedures.

EMERGENCY DESCENT

1. Throttles - IDLE.
2. Speed Brakes - EXTEND.
3. Initiate Moderate Bank.
4. Airplane Pitch Attitude - 15 DEGREES NOSE DOWN.
5. Passenger Advisory Lights - PASS SAFETY.
6. Maximum Airspeed - V_{MO}/M_{MO} (Use reduced speed if structural damage has occurred).
7. Transponder - EMERGENCY.

Fig. 6: Emergency procedures in case of rapid decompression and emergency descent Source: AFM

Figure 7 shows the emergency procedure for a cabin pressure above the normal range (overpressurization).

OVERPRESSURIZATION

1. Cabin Altitude Selector - SET to higher cabin altitude.
2. Rate Control - INC.

IF STILL OVERPRESSURIZED

3. Pressurization Source Selector - LH or RH; control cabin pressure with throttle.

IF UNABLE TO CONTROL

4. Oxygen Masks - DON and 100% OXYGEN.
5. Passenger Oxygen Masks - MANUAL DROP.
6. Crew Oxygen Priority Valve - CHECK normal.
7. Passenger Oxygen - ENSURE passengers are receiving oxygen.
8. Oxygen Microphone Switches - MIC OXY MASK.
9. Passenger Advisory Light - PASS SAFETY.
10. Pressurization Source Selector - OFF.
11. Descend.

IF STILL OVERPRESSURIZED

12. Emergency Dump Switch - DUMP.
13. Refer to Use of Supplemental Oxygen Procedures in the Abnormal Procedures.

Fig. 7: Emergency procedure overpressurization Source: AFM

[2] The pilot has to complete the encircled checklist items from memory

Oxygen System

The aircraft's oxygen system consists of a distribution system of emergency oxygen for the flight crew and the passengers (Fig. 8 and 9).

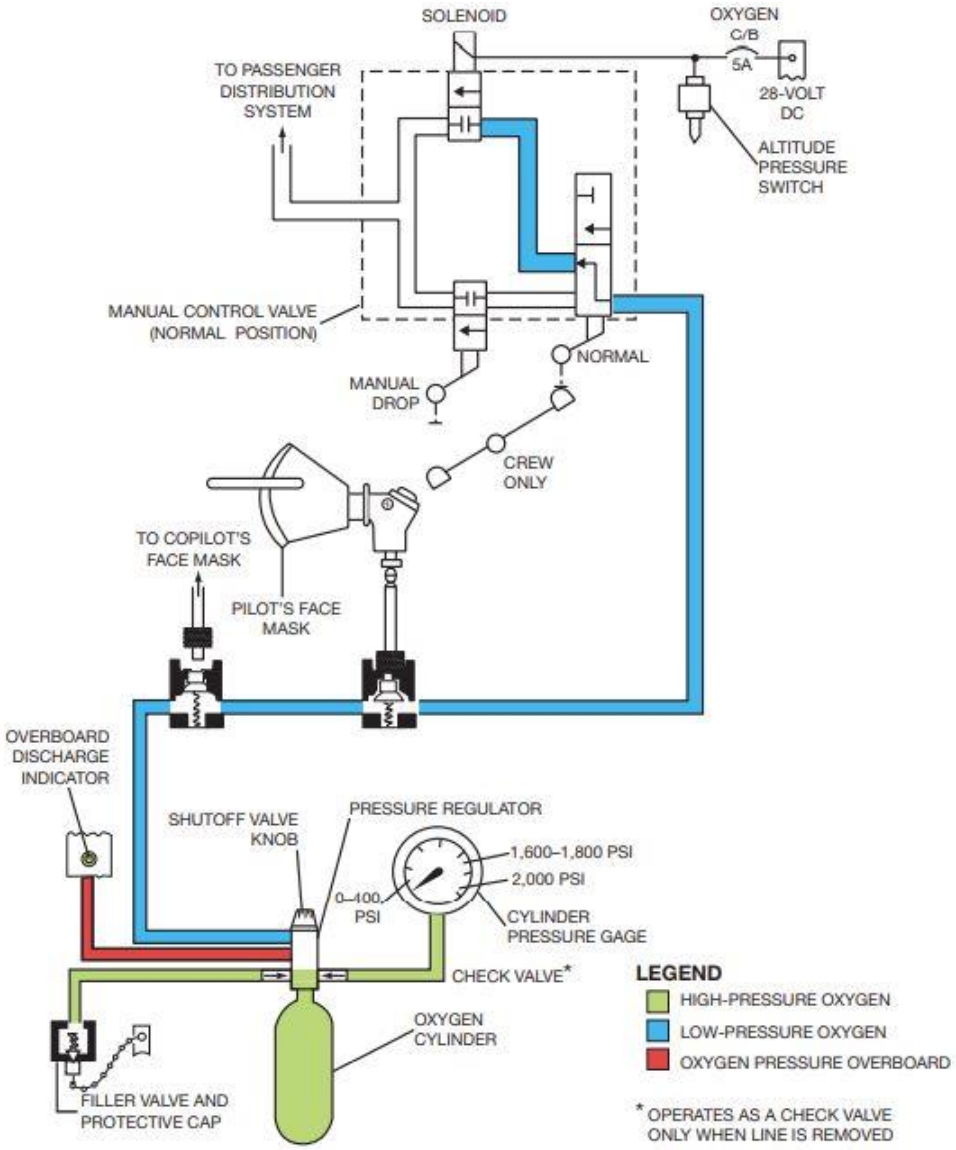

Fig. 8: Oxygen system cockpit Source: FlightSafety International

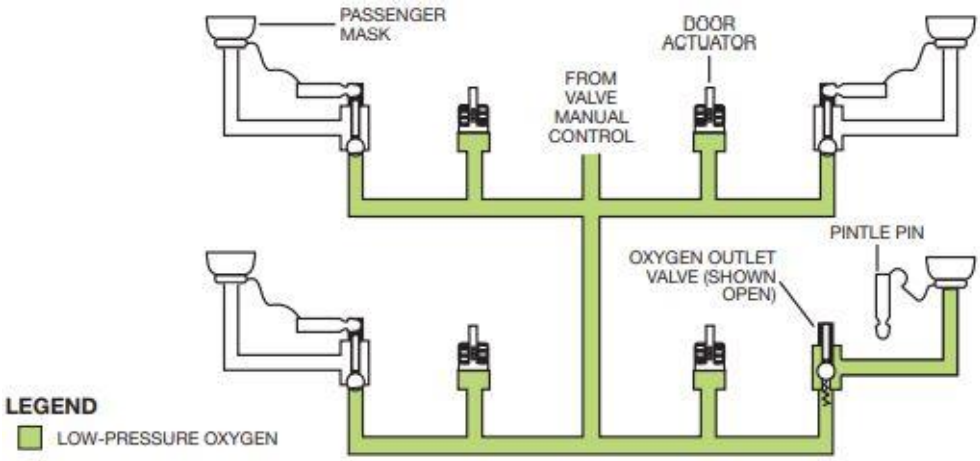

Fig. 9: Oxygen system cabin Source: FlightSafety International

The system consists of: one oxygen cylinder with integrated shut-off valve and pressure regulator, one filler valve, masks for the flight crew and the passengers, one altitude pressure switch, one overboard discharge indicator, one cylinder pressure gage[3] and control switches on the pilot console at the side (Fig. 10 and 11).

Fig. 10: Position of the oxygen pressure indication in the cockpit Source: FlightSafety International

[3] The indication shows the pressure in the oxygen cylinder independent of the position of the shut-off valve

Fig. 11: Oxygen panel Source: FlightSafety International

In principle, oxygen is available to the flight crew at any time and can be provided for the passengers automatically above a certain cabin altitude or manually at any altitude by the flight crew. Primarily, the system provides emergency oxygen.

Figure 12 shows the procedure the aircraft manufacturer stipulated in case of an unpressurised cabin (AFM, Section III Abnormal Procedure).

USE OF SUPPLEMENTAL OXYGEN (UNPRESSURIZED)

1. Oxygen Masks
   - NORMAL below 25,000 feet cabin altitude.
   - 100% at or above 25,000 feet.
   - Ensure crew and passengers are receiving oxygen.
2. Cabin Altitude
   - MAXIMUM 25,000 feet with passengers.
   - MAXIMUM 34,000 feet crew only.
   - Adjust flight altitude as required.
3. Oxygen - CHECK ENDURANCE (Refer to Figure 3-3)
4. Range - COMPUTE, based on oxygen endurance and revised fuel flow and ground speed).

Fig. 12: Procedure to use the oxygen system in case of unpressurised cabin Source: AFM

For the flight crew Scott EROS oxygen masks (P/N: MC10-16-01, L/H S/N: 116745, R/H S/N: 116541) with integrated microphones were fitted. The Aircraft Maintenance Program (AMP) and the aircraft manufacturer's Aircraft Maintenance Manual (AMM) stipulated an overhaul interval of 6 years and an inspection and functions test every 36 months or 1,200 hours. The oxygen mask for the PIC's seat was fitted on 30 October 2018. The one of the co-pilot on 12 August 2020. On 18 March 2022, the inspection and function tests of the crew masks were documented and performed at an operating time of 7,494 hours. The inspection and function tests of the passenger oxygen masks, which, according to the AMP and AMM, were required every 36 months or 1,200 hours, had also been performed on 18 March 2022.

A B/E Aerospace oxygen cylinder (P/N: 176176-64, S/N: 748439) was installed in the airplane. According to the label, its volume was 67,4 ft³ with a pressure of 1,850 PSI. It carried the label DOT-Number 3HT1850 and a placard „Next Test Due: 07-2023. According to the AMP and the AMM, the cylinder had to be exchanged every 24 years and every 36 months hydrostatic testing had to be carried out. The maintenance documentation showed that on 16 July 2020 the oxygen cylinder had last been inspected. In connection with the last hydrostatic test of 10 August 2020, the oxygen cylinder was installed in the aircraft and was last filled with oxygen on 29 September 2021.

According to the statement of the aircraft manufacturer, assuming a fully filled oxygen cylinder with a volume of 64 ft³ and depending on the cabin altitude and the number of occupants, additional oxygen can be provided for the time depicted in Figure 13 (AFM, Section V Supplement 31) when using oxygen masks.

EROS OXYGEN MASK AND 64-CUBIC FOOT CYLINDER

AVAILABLE TIME IN HOURS:MINUTES								
CABIN ALTITUDE	1 COCKPIT	2 COCKPIT	2 COCKPIT 2 CABIN	2 COCKPIT 4 CABIN	2 COCKPIT 6 CABIN	2 COCKPIT 8 CABIN	2 COCKPIT 10 CABIN	2 COCKPIT 11 CABIN
8,000	18:08	9:04	2:17	1:18	0:55	0:42	0:34	0:31
10,000	20:50	10:25	2:23	1:20	0:56	0:43	0:35	0:32
15,000	20:50	10:25	2:25	1:22	0:57	0:44	0:36	0:33
20,000	16:22	8:11	2:19	1:21	0:57	0:44	0:36	0:32
25,000	9:02	4:31	1:54	1:12	0:53	0:42	0:34	0:33
30,000	11:59	5:57						
35,000	16:10	8:05						
37,000	18:31	9:16						

Fig. 13: Available time to use additional oxygen Source: AFM

The pre-flight check (EXTERIOR INSPECTION and COCKPIT INSPECTION) and the BEFORE STARTING ENGINES checklist of the aircraft manufacturer stipulated the following items in regard to the oxygen system:

- Oxygen Blowout Disc - GREEN (Airplanes with nose mounted oxygen cylinder)
- Oxygen Masks - ABOARD.
- OXYGEN PRIORITY and PASS OXY MASK Valves - CHECK IN NORMAL.
- Crew Oxygen Mask and Pressure - CHECK (check mask at 100% and in EMER).

Meteorological Information

According to the aviation routine weather report (METAR) of 1750 UTC of Ventspils Airport, located about 23 NM from the accident site, the following weather conditions prevailed:

Wind:	010°, 6 kt
Cloud/visibility:	CAVOK
Temperature:	11°C
Dewpoint:	8°C
QNH:	1,029 hPa

At the time of the accident, at 1745 UTC, twilight prevailed. At 1726 UTC, the sun had set.

Radio Communications

All radio communications between the pilot and the Spanish air traffic control, starting with the pilot contacting Jerez Tower at 1240:33 UTC, were made available to the BFU as audio files and transcripts. Radio communications were mostly held in English.

The BFU also had available radio communications transcripts of different air traffic control units after radio contact with the pilot had been lost.

Flight Recorder

The airplane was not equipped with a Cockpit Voice Recorder or a Flight Data Recorder. According to aeronautical regulations, such equipment was not required.

The BFU had radar recordings of different European air traffic control organisations and recorded transponder data available for evaluation purposes.

Video recordings from the parking position at Jerez Airport were also made available to the BFU.

Wreckage and Impact Information

Securing Evidence in Case of Air Accidents over Sea

After an accident over sea, the responsible safety investigation authority may begin an underwater search and recovery of the aircraft, if appropriate, in order to secure evidence. Search and recovery are only conducted if the seized evidence contributes decisively to the clarification of the occurrence.

Search for the Aircraft

The responsible air traffic control units and different military aircraft observed the flight. Military aircraft also observed the impact, so that the approximate location of the accident site was known. It was located about 20 NM north-west of the Latvian city Ventspils in the Baltic Sea and therefore in international waters, but within the Riga Flight Information Region (FIR). The Latvian Aeronautical Rescue Co-ordination Centre (ARCC) was responsible for search and rescue within the Riga FIR. The Maritime Rescue Coordination Centre (MRCC) in Riga coordinated the search for survivors and the aircraft.

A few human remains and several smaller wreckage parts, such as an antenna, the oxygen cylinder, seat cushions and other parts of the cabin's interior, were recovered from the surface of the sea.

Sonar was used to search the sea bottom. A few hours after the accident, a sidescan sonar localised a debris field on the sea bottom of about 100 x 150 m in a depth of 62 m. A remote-controlled underwater vehicle approached the located parts; they could be clearly assigned to the accident aircraft.

Accident Site

On impact with the surface of the water, the airplane had been destroyed. Besides the numerous smaller wreckage parts, three larger ones were found: one piece of the fuselage including parts of the wing and landing gear, another piece of wing and parts of the tail (Fig. 14 and 15).

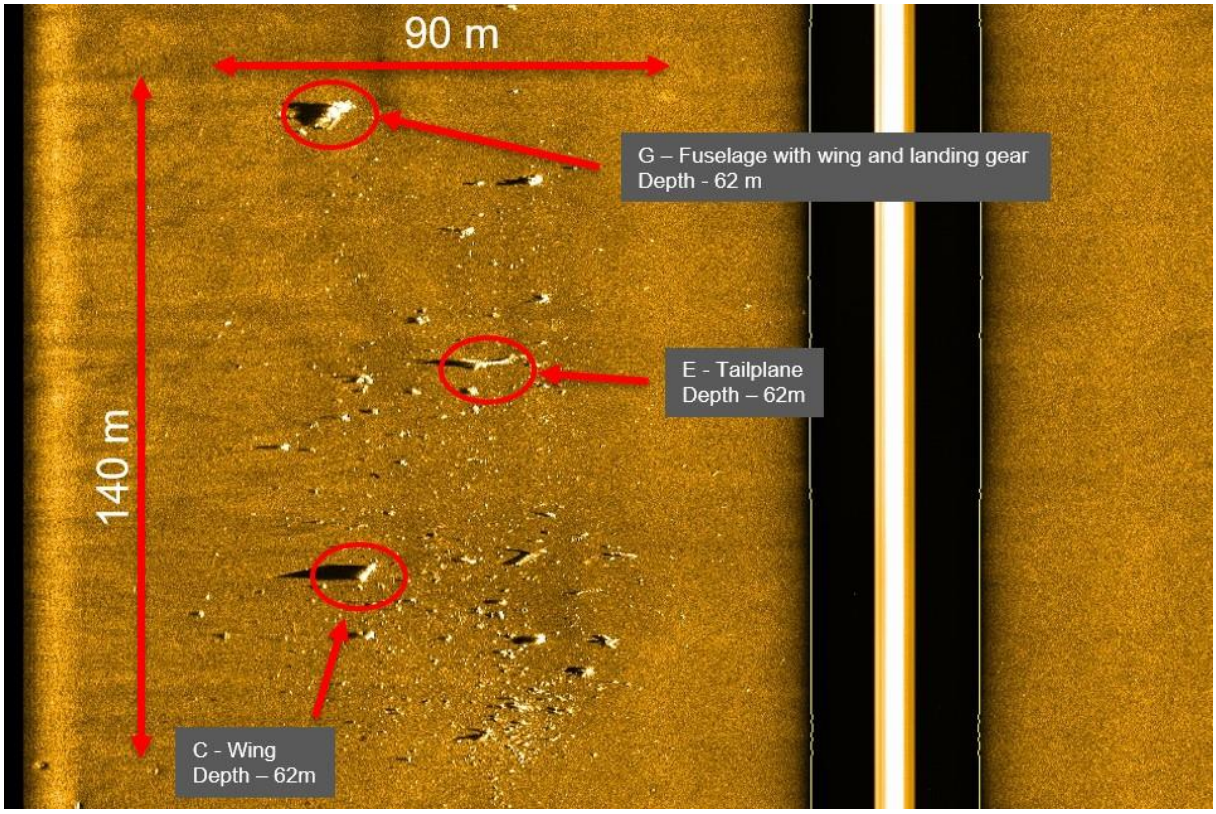

Fig. 14: Degree of destruction and distribution of wreckage parts on the sea bottom

Source: Latvian MRCC, adaptation BFU

Fig. 15: Tail (left), fuselage (right)

Source: Latvian MRCC

Investigator in charge: Jens Friedemann

Field Investigation: Jens Friedemann, Paul Kirchner, Thomas Kostrzewa

This investigation is conducted in accordance with the regulation (EU) No. 996/2010 of the European Parliament and of the Council of 20 October 2010 on the investigation and prevention of accidents and incidents in civil aviation and the Federal German Law relating to the investigation of accidents and incidents associated with the operation of civil aircraft (*Flugunfall-Untersuchungs-Gesetz - FlUUG*) of 26 August 1998.

The sole objective of the investigation is to prevent future accidents and incidents. The investigation does not seek to ascertain blame or apportion legal liability for any claims that may arise.

This document is a translation of the German Investigation Report. Although every effort was made for the translation to be accurate, in the event of any discrepancies the original German document is the authentic version.

Published by:

Bundesstelle für
Flugunfalluntersuchung

Hermann-Blenk-Str. 16
38108 Braunschweig

Phone +49 531 35 48 - 0
Fax +49 531 35 48 - 246

Mail box@bfu-web.de
Internet www.bfu-web.de